物料包块效果 Baled Material Sample

南通佳宝公众号

南通佳宝机械有限公司	NanTong JiaBao Machinery Co.,Ltd
公司地址：中国上海静安区江场西路299号6号楼9层	ADD: 9th Floor,# 6 Building ,Lane 299,West JiangChang Road,Shanghai,China.
工厂地址：江苏省如皋市高新区新源东一路1号	Factory: No.1, East Xinyuan Road, High-tech Park, Rugao, Jiangsu, China.
座机：021-61400509	Tel: 0086 21 61400508
客服电话：021-68564313	Customer Service Hotline: 0086 21 68564313
手机：17721659980/13817393713	Mob:0086 17721659980/13817393713
网址：www.csj-baler.com cn.jewelbaler.com	Web: www.jewelbaler.com
邮箱：jiajing@shjiajing.com	E-mail: jiajing@shjiajing.com

JEWEL 佳宝牌® PACKING

佳 宝 智 能 打 包 系 统

铝箔边料封闭式在线回收打包系统

Automated Closed Structure Baling System for Aluminum Foil Edge Trims

2026

公司介绍 COMPANY INTRODUCTION

关于我们/About Us

- 1995年9月在上海创建公司，专业从事环保设备、包装设备的开发、生产和销售。
- 公司拥有 JEWEL 和 CSJ 品牌商标。
- 2004年10月江苏工厂投入建设，06年8月竣工同时通过验收。
- 2007年与科研单位合作，并获得质量管理体系认证ISO9001:2008。
- 2009年公司产品获得欧盟CE安全认证。
- 2012年公司获得TUV及SGS认证。
- 2015年公司投入第二工厂，面积达到33300平方米。
- 2017年公司获得高新技术企业、高新技术产品认定证书。
- 2018年获得质量管理体系认证ISO9001:2015。
- 2020年获得江苏省工程技术研究中心。
- 2021年获得环境管理体系认证ISO14001:2015,主营“液压打包机”系列产品被荣选为“中国绿色节能环保产品”。
- 2022年荣获省级“专精特新”小巨人企业和“江苏省服务型示范制造企业”称号。
- 2023年获得南通市工业设计中心。
- 2024年通过ISO 45001:2018职业健康安全管理体系认证。
- 2025年获国家级专精特新“小巨人”称号。三期厂房开工建设，正式开启新的篇章！
- 公司获得发明专利16项，实用新型专利75项，产品销售全球120多个国家和地区，服务过二千多家知名企业，拥有丰富的经验，为您提供更合理的解决方案。

- In September 1995, Jewel was established in Shanghai, specializing in developing, manufacturing and selling of eco-friendly packing equipment.
- We have two trademarks and trade names which are JEWEL and CSJ.
- In October 2004, the first factory of Jewel was put into construction in Jiangsu, completed and inspected in August 2006.
- In 2007, we partnered with scientific research institutes and obtained the ISO 9001:2008 Quality Management System certification.
- In 2009, we obtained CE Safety Certificate from EU.
- In 2012, we obtained TUV Certificate and SGS Certificate.
- The second factory with an area of more than 30,000 square meters of Jewel Machinery was started and successfully finished in 2015.
- In 2017, Jewel obtained the High-Tech Enterprise Award and High-Tech Product Certificate.
- In 2018, we obtained the ISO 9001:2015 Quality Management System Certification.
- In 2020, our company was accredited as a Jiangsu Provincial Engineering Technology Research Center.
- In 2021, we obtained the ISO 14001:2015 Environmental Management System Certification, and our main hydraulic baler series was honored as "China's Green, Energy-Saving and Environmentally Friendly Product."
- In 2022, our company was honored with the dual titles of "Provincial Specialized, Refined, Distinctive, and Innovative" SME Giant and "Jiangsu Provincial Service-Oriented Demonstration Manufacturing Enterprise."
- In 2023, our company was recognized as an Industrial Design Center by the Nantong Municipal Government.
- 2024 Milestones: ISO 45001:2018 Occupational Health & Safety Management System.
- Honored as a national "Little Giant" in 2025. Now breaking ground on our Phase-III factory to begin a new era.
- Nantong Jiabao Machinery Co., Ltd. has been granted 16 invention patents and 75 utility model patents. Our products are sold to more than 120 countries and regions worldwide, and we have served over 2,000 renowned enterprises. This extensive experience allows us to provide you with more rational and effective solutions.

认证证书 CERTIFICATE

获得欧盟“CE安全体系认证”
CE Safety System Certificate

获“SGS”认证供应商
“SGS” Certificate

获“TUV”认证
“TUV” Certificate

获国家级“专精特新”小巨人证书
Won the National -level "Specialization, refinement, distinctiveness, and novelty" certificate

荣获“高新技术企业”证书、“江苏省工程技术研究中心”认定
Won the "High-tech Enterprise" certificate and the "Jiangsu Provincial Engineering Technology Research Center" certification

通过了“ISO 9001：2015质量管理体系认证”
“ISO 14001：2015环境管理体系认证”
Passed ISO 9001-2015 QMSC
Passed ISO 14001-2015 EMSC

获“职业健康安全管理体系”认证
Obtained the "Occupational Health and Safety Management System" certification

全自动铝箔边料打包机

Fully automatic aluminum foil edge baler machine

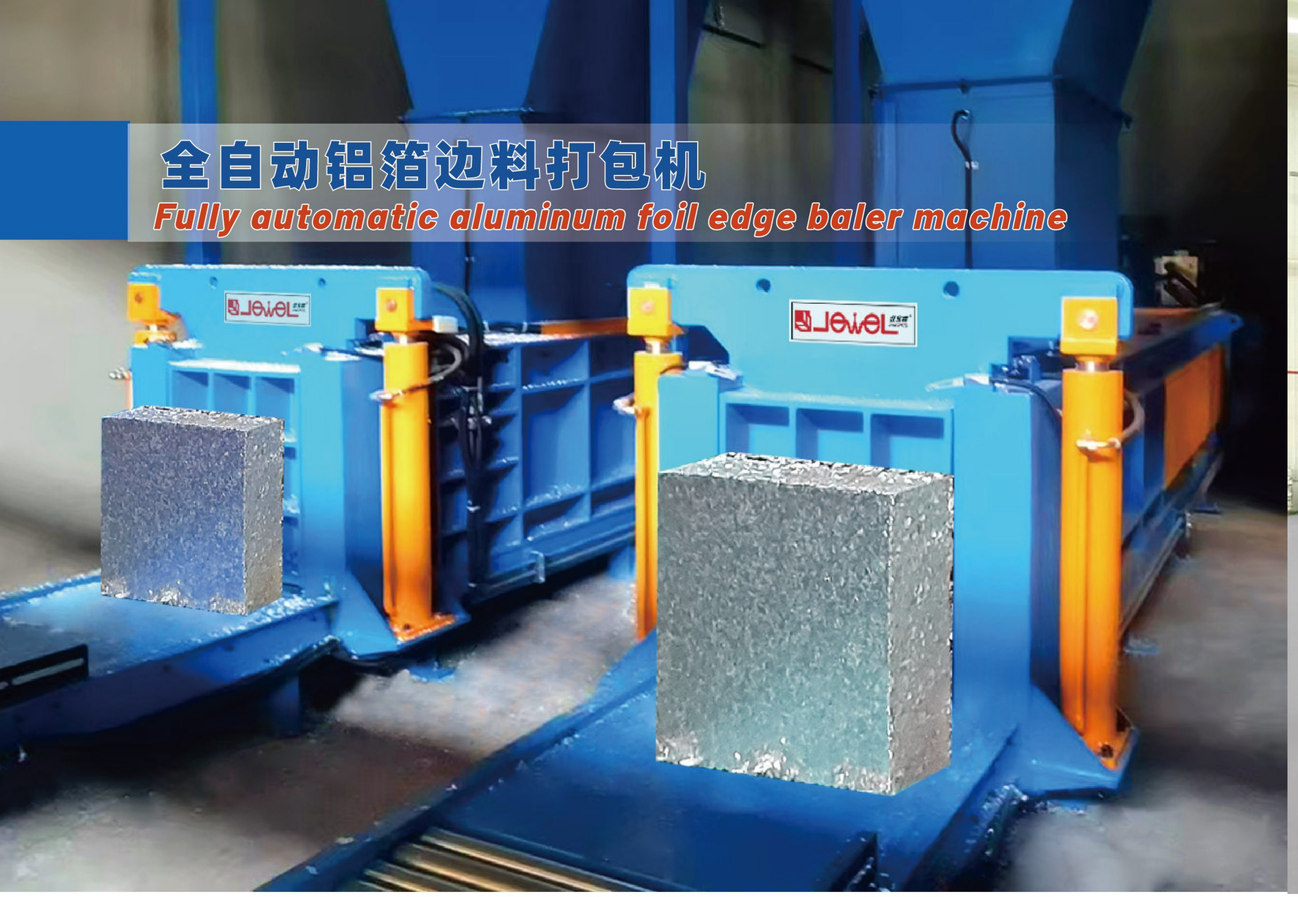

* 适用：铝箔、铜箔修边、易拉罐、铝制品薄金属类的边料回收压块；
* 可承接：箔轧机（精轧机、粗轧机）、铝箔分切机、合卷机、精切机、薄箔剪切机、厚箔剪切机、倒卷机、分卷机、重卷机等设备在生产中产生的边料；
* 整套设备PLC触摸屏人机界面控制，操作简单，方便各项数值设定；
* 自带物料检测功能，自动启停，自动压缩，实现无人化值守；
* 配置板式分离器，在物料通过风机管道输送过程中实现气料分离；
* 封闭式压缩腔，压缩包块紧实，密度可达600-800kg/m³，每小时处理量：200-500kg；
* 遵守MODBUS 通讯协议，方便升级到集中远程监控。

Applicable Materials: aluminum foil and copper foil trims, recycling and briquetting of scrap materials from beverage cans and other thin aluminum products;

Applicable Equipment: Scrap materials generated during the production of foil rolling mills (finishing mills, roughing mills), aluminum foil slitting machines, coiling machines, precision cutting machines, thin foil shearing machines, thick foil shearing machines,slitting machines, rewinding machines, etc.;

Control System: PLC with touch screen HMI for easy operation and parameter setting.

Automation: Built-in material detection function, automatic start/stop, automatic compression, achieving unmanned operation;

Material Separation: Equipped with a plate separator to separate waste material from air during material transport through the fan and pipeline;

Performance: Closed compression chamber, dense bales (600-800 kg/m³). Capacity: 200-500 kg/h.

Communication: Complies with the MODBUS communication protocol, facilitating upgrades to centralized remote monitoring.

型号 Model	压缩力 Hydraulic Power (Ton)	包块尺寸 Bale Size (L*H) mm	加料口尺寸 Feed Opening Size (L*W) mm	功率/马力 Power (KW/HP)	机器尺寸 Machine Size (L*W*H) mm
JPW-AK100	100	400*400	1500*360	30/40	7500*1200*2000
JPW-AK120	120	500*500	1500*460	37/50	7500*1300*2100
JPW-AK160	160	600*600	1500*560	45/60	7800*1500*2200

* 以上参数仅供参考。根据材料不同产能会发生变化。The above parameters are for reference only. Capacity may vary with materials.

全自动铝箔边料双压头打包机

Fully Automatic Double-Ram Aluminum Foil Edge Scrap Baler

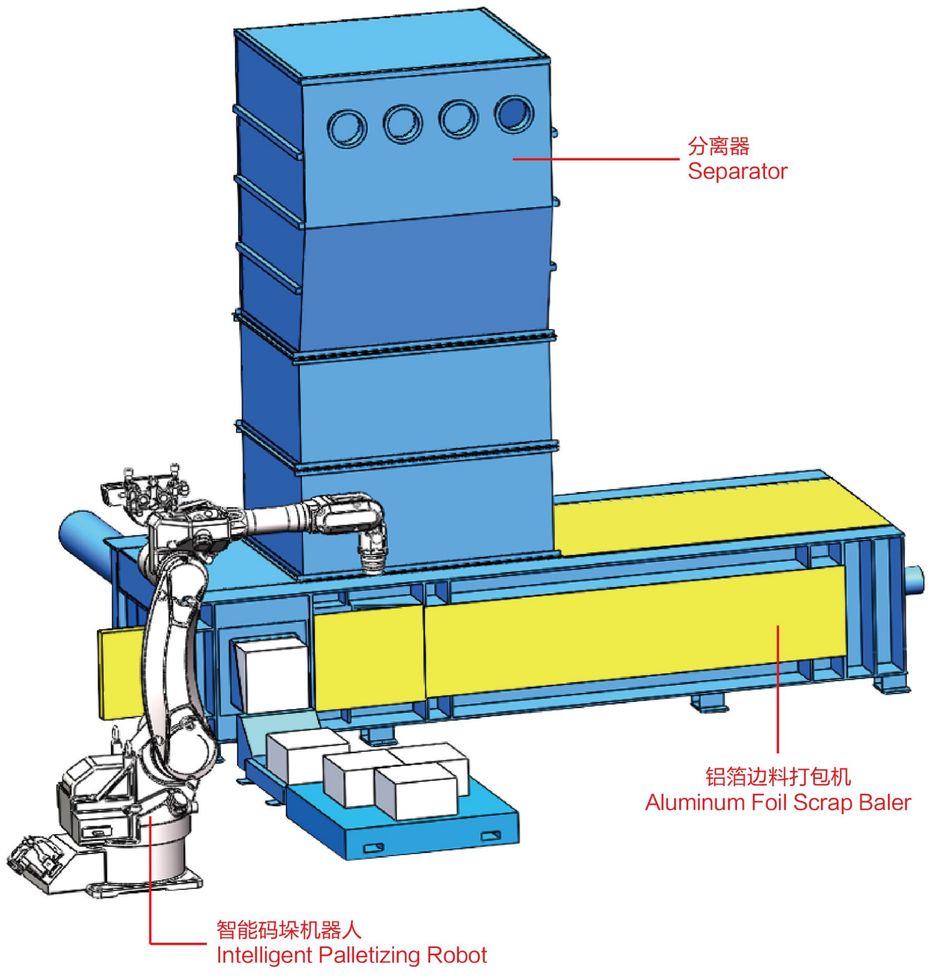

型号 Model	压缩力 Hydraulic Power (Ton)	包块尺寸 Bale Size (L*H) mm	加料口尺寸 Feed Opening Size (L*W) mm	功率/马力 Power (KW/HP)	机器尺寸 Machine Size (L*W*H) mm
JPW-AK100Q	100	400*400	1500*360	30/40	7500*1200*2000
JPW-AK120Q	120	500*500	1500*460	45/55	7500*1300*2100
JPW-AK160Q	160	500*500	2000*1350	60/80	8800*5000*2200

* 以上参数仅供参考。根据材料不同产能会发生变化。The above parameters are for reference only. Capacity may vary with materials.

* 适用：铝箔、铜箔修边、易拉罐、铝制品薄金属类的边料回收压块；

* 自带物料检测功能，实现自动启停，节省能耗，自动压缩，可配套机器人自动码垛系统，实现无人化操作；

* 可承接：箔轧机（精轧机、粗轧机）、铝箔分切机、合卷机、精切机、薄箔剪切机、厚箔剪切机、导卷机、分卷机、重卷机等设备在生产中产生的边料；

* 铝箔生产设备可通过碎边风机管道连接打包机，实现在线密闭输送；

* 分离设备采用板式分离设计，可使空气与铝箔碎屑实现气料分离；

* 封闭式压缩腔，密度可达≥800kg/m³， 每小时处理量：500-1100kg；

* 遵守MODBUS 通讯协议，方便升级到集中远程监控；

Applicable Materials: aluminum foil and copper foil trims, recycling and briquetting of scrap materials from beverage cans and other thin aluminum products;

Applicable Equipment: Scrap materials generated during the production of foil rolling mills (finishing mills, roughing mills), aluminum foil slitting machines, coiling machines, precision cutting machines, thin foil shearing machines, thick foil shearing machines,slitting machines, rewinding machines, etc.;

Control System: PLC with touch screen HMI for easy operation and parameter setting.

Automation: Built-in material detection function, automatic start/stop, automatic compression, achieving unmanned operation;

Material Separation: Equipped with a plate separator to separate waste material from air during material transport through the fan and pipeline;

Performance: Closed compression chamber, dense bales (≥800kg/m³). Capacity: 500-1100kg/h.

Communication: Complies with the MODBUS communication protocol, facilitating upgrades to centralized remote monitoring.

铝箔首尾料翻盖式打包机

Aluminum foil head and tail material flip-top baler

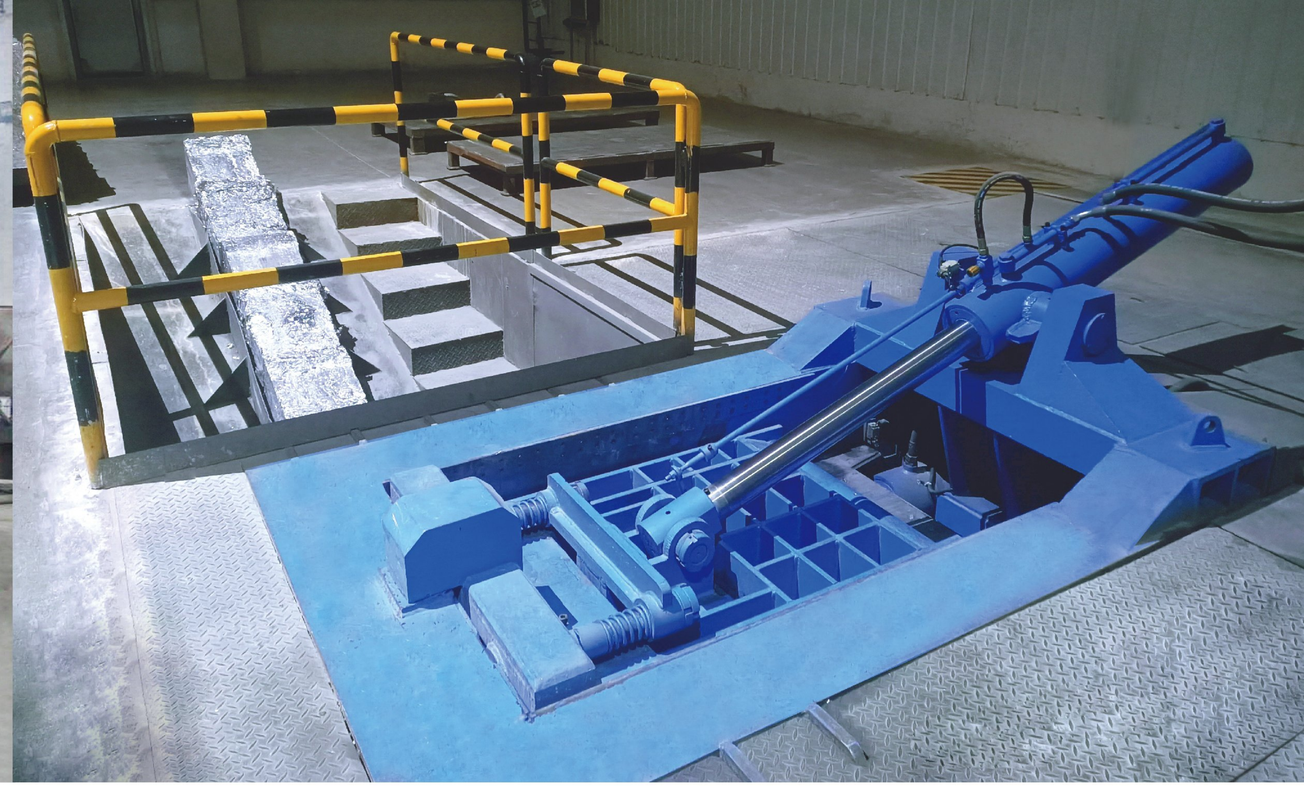

* 适用铝箔、铜箔换卷时产生的体积大的头尾废料以及其他类的金属的压缩打包；
* 此设备可减少空间堆放废料，降低运输和冶炼成本，又可提高产量；
* 该系列打包机可在钢厂、车床切屑、有色金属及黑色金属冶炼行业使用；
* 所有机型均采用液压驱动，自动、手动双模式功能操作；
* 机器箱体 、 门盖均带刀片，有利于切断长边料；
* 压缩尺寸和包块尺寸可根据用户要求来设计制定；

* Suitable for compressing and baling large-volume head and tail waste generated during aluminum foil and copper foil roll changes, as well as other types of metals;

* This equipment reduces space required for waste storage, lowers transportation and smelting costs, and increases output;

* This series of balers can be used in steel mills, lathe cutting, and non-ferrous and ferrous metal smelting industries;

* All models are hydraulically driven with automatic and manual dual-mode operation;

* The machine body and door are equipped with blades, which facilitates cutting long-edge materials;

* Compression size and bale size can be designed and customized according to user requirements;

型号 Model	压缩力 Hydraulic Power (Ton)	料箱尺寸 Chamber Size (L*W*H) mm	包块尺寸 Bale Size mm	功率/马力 Power (KW/HP)	操作方法 Operation Method	出包方式 Bale Output Type
JPY81-160	160	1600*1000*800	350*350	22	手动/PLC自动 Manual valve/PLC automatic	侧推包 Lateral pushing block
JPY81-200	200	1600*1200*800	400*400	30	手动/PLC自动 Manual valve/PLC automatic	侧推包 Lateral pushing block
JPY81-250	250	2000*1400*1000	450*450	45	手动/PLC自动 Manual valve/PLC automatic	侧推包 Lateral pushing block
JPY81-315	315	2500*1750*1000	500*500	2*45	手动/PLC自动 Manual valve/PLC automatic	侧推包 Lateral pushing block
JPY81-500	500	2500*2000*1200	600*600	172.2	手动/PLC自动 Manual valve/PLC automatic	侧推包 Lateral pushing block

✻ 以上参数仅供参考。根据材料不同产能会发生变化。The above parameters are for reference only. Capacity may vary with materials.

铝制品冲压生产线全自动废料打包机

Automatic Scrap Baling Press for Aluminum Stamping Production Line

针对铝制品冲压生产线的废料，可使用内机吹送系统，将废料破碎或吸入全自动废料打包机，进行压缩打包成捆。输送过程中，通过设备上配备的专用旋风分离器实行气料分离。

该设备还可以增设管道系统，同时满足于两条及以上冲压生产线废料的处理。

For waste from aluminum stamping production lines, an internal conveying system can be used to crush the waste or suck it into a fully automatic waste baler for compression and bundling. During the conveying process, air-material separation is achieved through a dedicated cyclone separator on the equipment.

This equipment can also be equipped with a piping system to handle waste from two or more stamping production lines simultaneously.

型号 Model	压缩力 Hydraulic Power (Ton)	包块尺寸 Bale Size (L*W*H) mm	功率消耗 Power Consumption (KW)	机器尺寸 Machine Size (L*W*H) mm	重量 Weight (Ton)
JP30QP	30	400*400*400	5.5	1450*1300*2700	1.5

* 以上参数仅供参考。根据材料不同产能会发生变化。The above parameters are for reference only. Capacity may vary with materials.

客户案例

Customer Cases

贵阳贵铝

长沙晟通

南宁产投

常熟常铝

陇西中铝

丽岛新能源

东阳光电池箔

金域新能源

宜春博翔电子